1-800-639-2199 Fax (603) 224-2927

Headwalls\Standard\Wing Walls\30 in_Pipe_Wing Wall Sales

Phoenix Precast Products

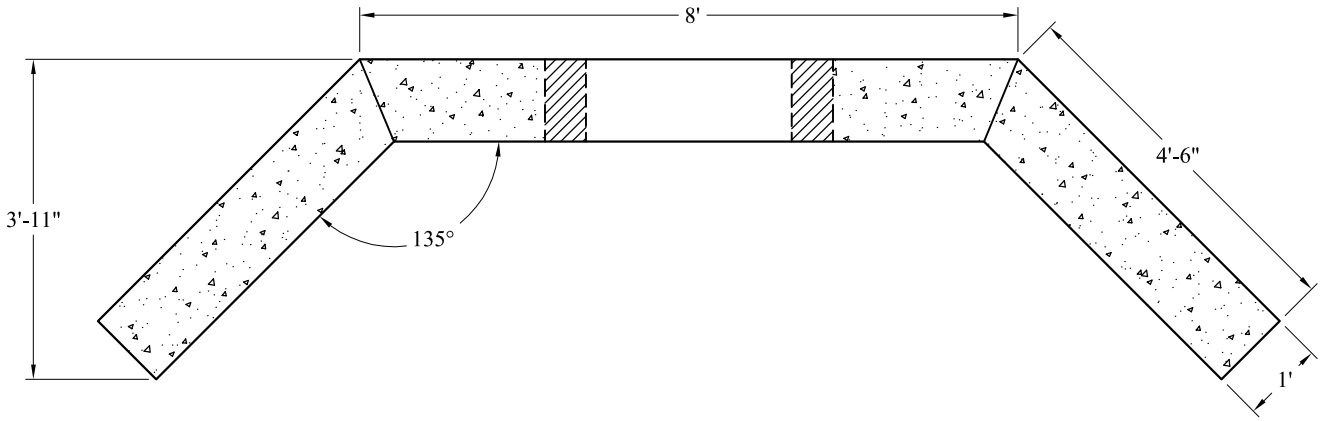

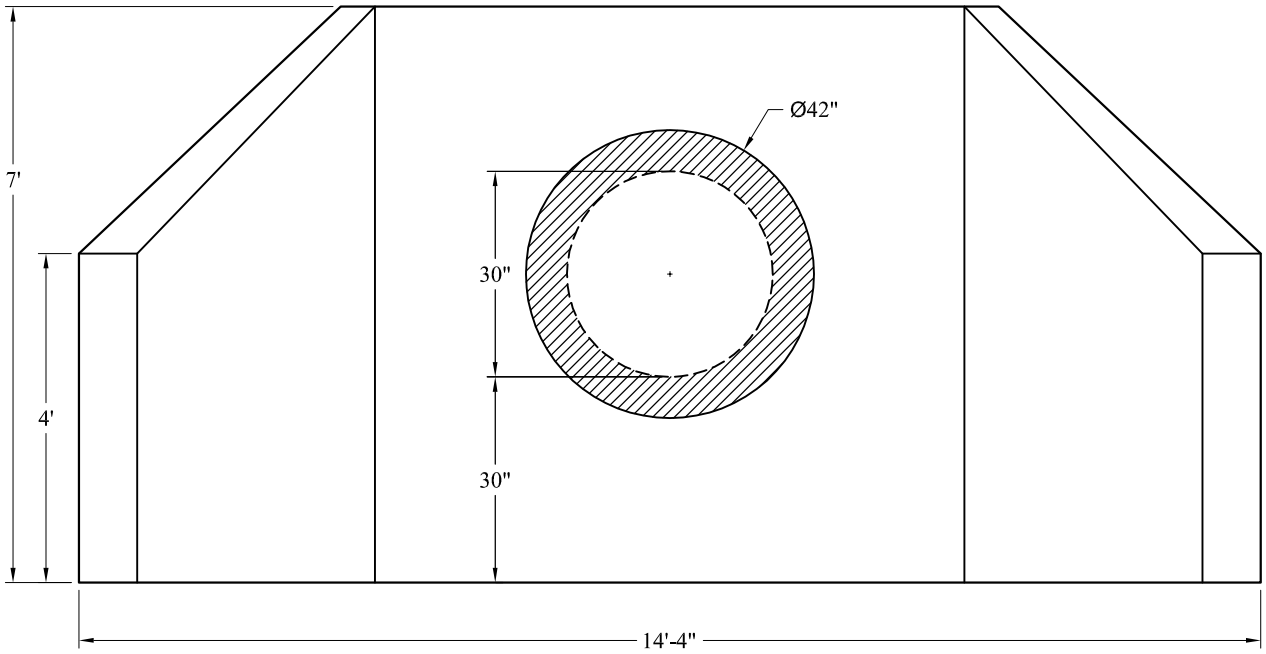

General Notes

1. Steel Reinforcement Conforms to Latest ASTM Specification: ASTM A-615 Grade 60 Black Deformed Bars
2. Concrete: fc = 4,000 psi @ 28 Days Minimum
3. Est Weight: 14,190 Lbs

Phoenix Precast Products	30" Pipe Winged Headwall
P/N: HWW-30	

Phoenix Precast Products

77 Regional Drive Concord, NH 03301