1-800-639-2199 Fax (603) 224-2927

Std Structures\4Ft Dia\Drop Inlet (v)

Phoenix Precast Products

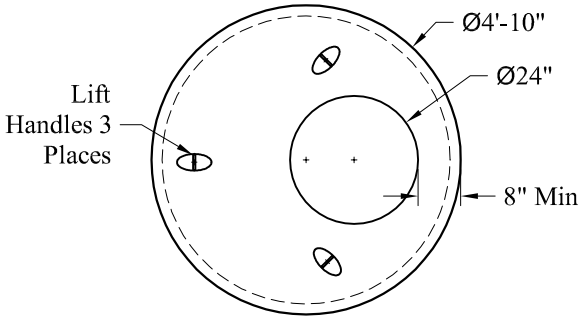

Plan View - Top Slab

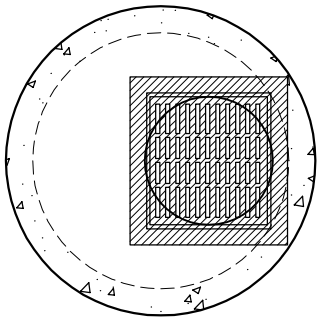

Plan View

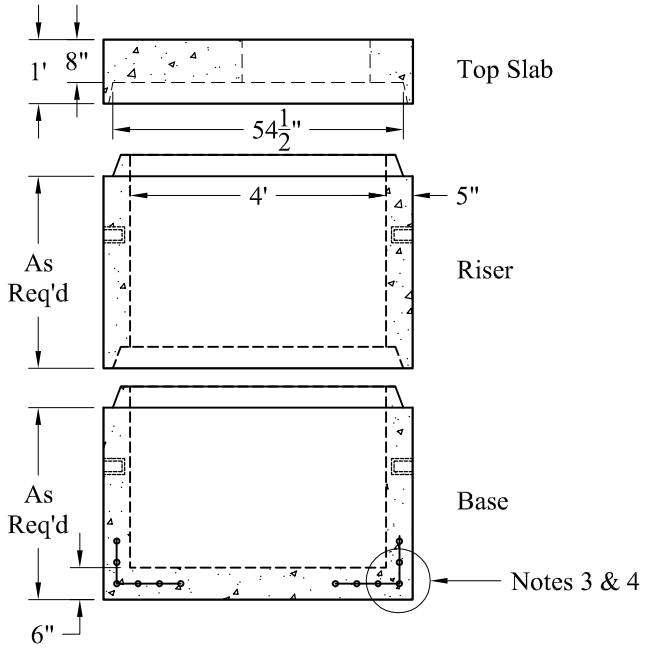

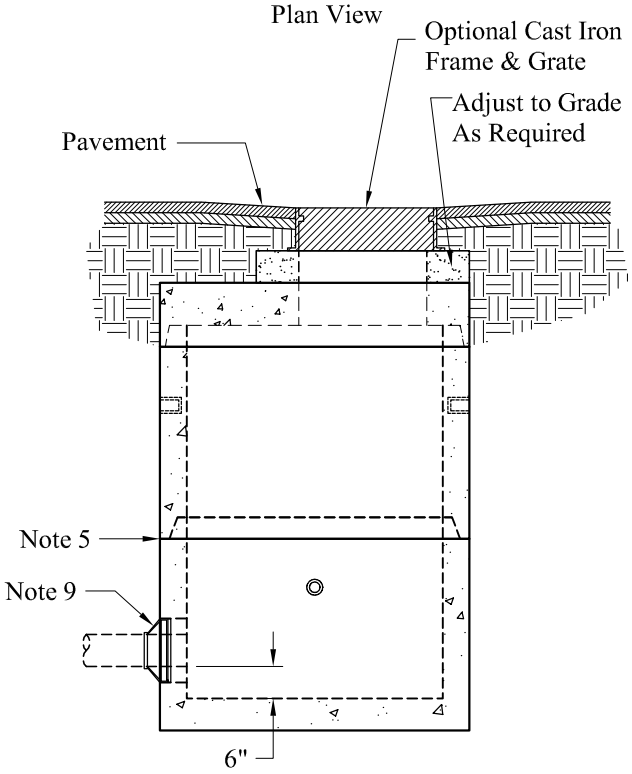

General Notes

1. Concrete: fc = 4,000 psi @ 28 Days Minimum, Type III Cement
2. HS-20 Design Loading Conforms to Latest Specifications ASTM C478, AASHTO M199 Precast Reinforced Concrete Manhole Sections
3. One Pour Monolithic Base Section
4. Steel Reinforcement Conforms to Latest ASTM Specification:
   ASTM A-615, Grade 60 Black Deformed Bars
   ASTM A-185 Welded Wire Fabric
   0.12 Sq. In./Lineal Ft. And 0.12 Sq. In.(Both Ways) Base Bottom
5. Butyl Rubber Joint Sealant Provided Conforms to ASTM C-990 And Federal Spec SS-S-210A
6. 94 Gallons/VF
7. Holes & Elevations TBD
8. Sections Available in Increments of 6"
9. Booted Pipe Connections (If Used) Conform to ASTM C-923. Maximum Booted Connection Pipe Size is 24"
10. Maximum Pipe OD is 32" (24" RCP)
11. Plastic Manhole Steps (If Required) are Steel Reinforced Conforming to ASTM C-478

Est Weights:

Top Slab:	2,000 Lbs
Wt/VF:	864 Lbs
Floor:	931 Lbs

Phoenix Precast Products

4' Diameter Drop Inlet

Phoenix Precast Products

77 Regional Drive Concord, NH 03301