1-800-639-2199 Fax (603) 224-2927

Trash Racks\Round Structures\Trash Rack Flat Rectangular Exp Metal (v)

Phoenix Precast Products

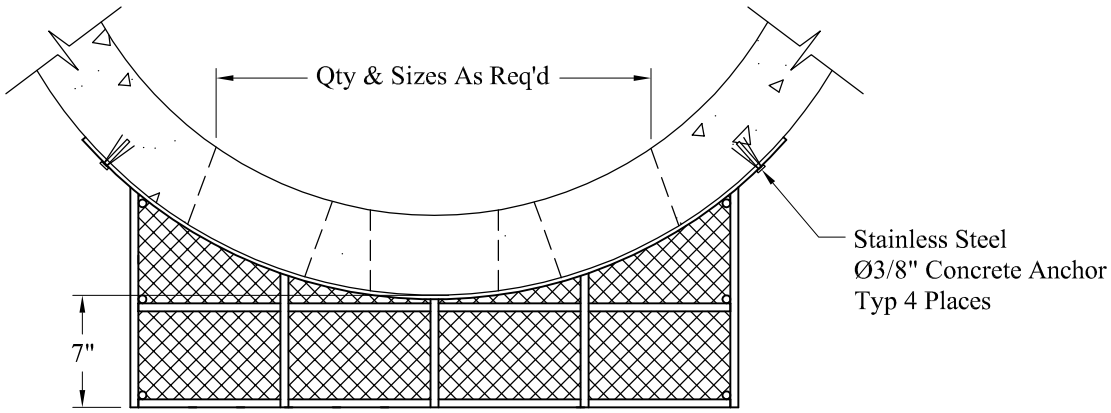

Plan View

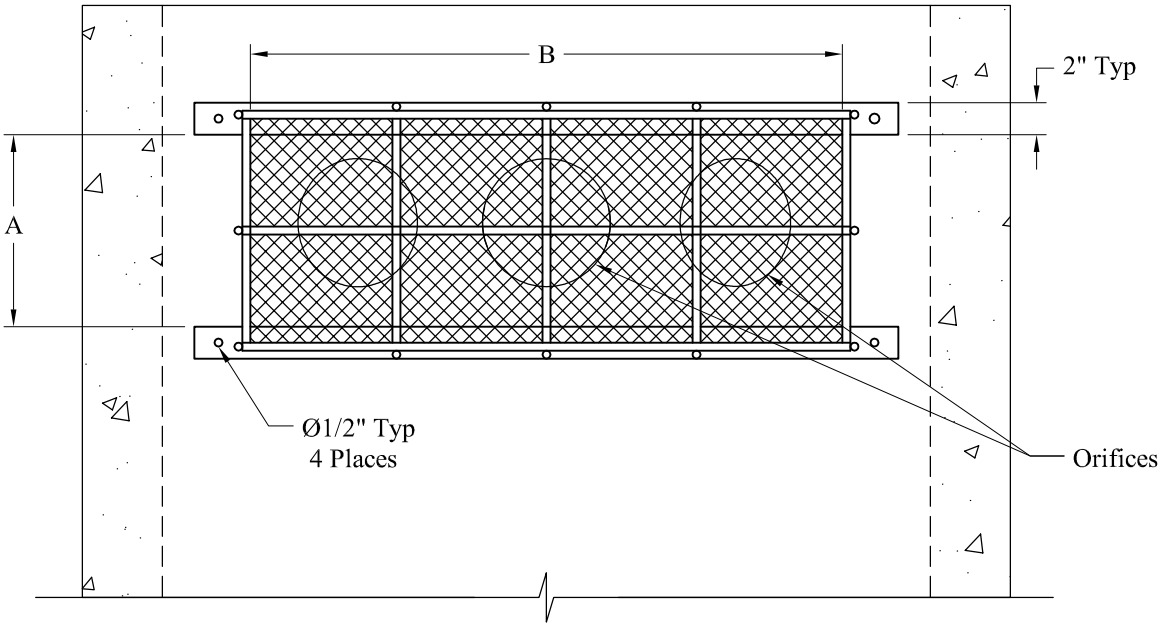

Front View

Requirements	
A	
B	

General Notes

1. Materials:
   2" x 3/16" Flat Steel Bar
   $\frac{1}{2}$" Dia HR Round Steel Bars @ 4" O.C.E.W.
2. Finish: Hot Dip Galvanized
3. Fastening Method:
   Bolted With $\frac{3}{8}$" Stainless Steel Concrete Anchors

Phoenix Precast Products	Round Structure Trash Rack Flat - Rectangular Expanded Metal
P/N:	

Phoenix Precast Products

10Mar14_Rev0 ews

77 Regional Drive Concord, NH 03301