1-800-639-2199 Fax (603) 224-2927

Phoenix Precast Products

Pipe Chart			
	Pipe	Pipe OD	Connection
E			
I			
F			
D			

Elevation Chart		
	Description	Elevation
R	Rim	
G	Finish Grade	
E	Electric Connection(s)	
I	Inlet	
F	Force Main Outlet	
D	Drain Back to Pump Station	
B	Inside Bottom Floor	
C	Outside Bottom of Concrete	
W	Top of Wall	
T	Top of Concrete	

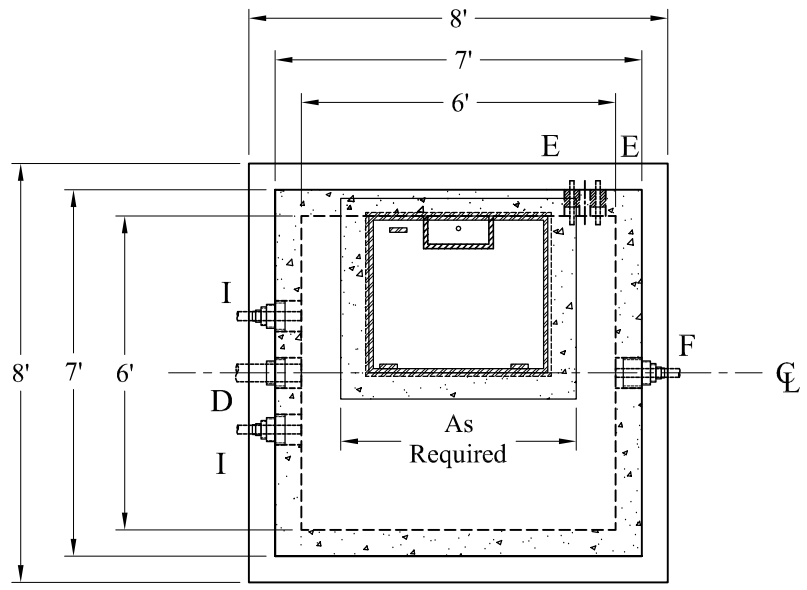

1.) Steel Reinforcement Conforms To Latest ASTM Specifications: ASTM A-615 Grade 60 Black Deformed Bars
2.) Concrete: fc = 5,000 PSI @ 28 Days Minimum, Type III Cement
3.) Butyl Rubber Joint Sealant Conforms to ASTM C-990 and Federal Spec SS-S-210A.
4.) Flexible Connection Provided For All Pipe Connections. See Table.
5.) All Valves, Mounting Hardware, and Related Ancillary Equipment Provided by Others.
6.) AASHTO-HS20-44 Design Loading Conforms to Latest Specifications ASTM C 890 & C 913
7.) Hatch to Drain Into Vault Unless Otherwise Noted
8.) Bouyancy Calculations Provided With Shop Drawing Submittal
9.) Optional Asphalt Coating Applied to All Exterior Surfaces Except Top Slab
10.) Optional Aluminum Ladder Available

Options:
- LinkSeal Pipe Connections
- LinkSeal Electrical Connections
- Exterior Damp Proofing/Water Proofing
- Interior Coatings
- Sloped Floor
- Exterior Joint Wrap
- Safety Net, Safety Grate
- Anti-Flotation Collar

Est Weights:
- Top Slab: 4,850 Lbs
- Risers: 1,925 Lbs/VF
- Sloped Floor: 2,825 Lbs
- Base Slab: 4,750 Lbs

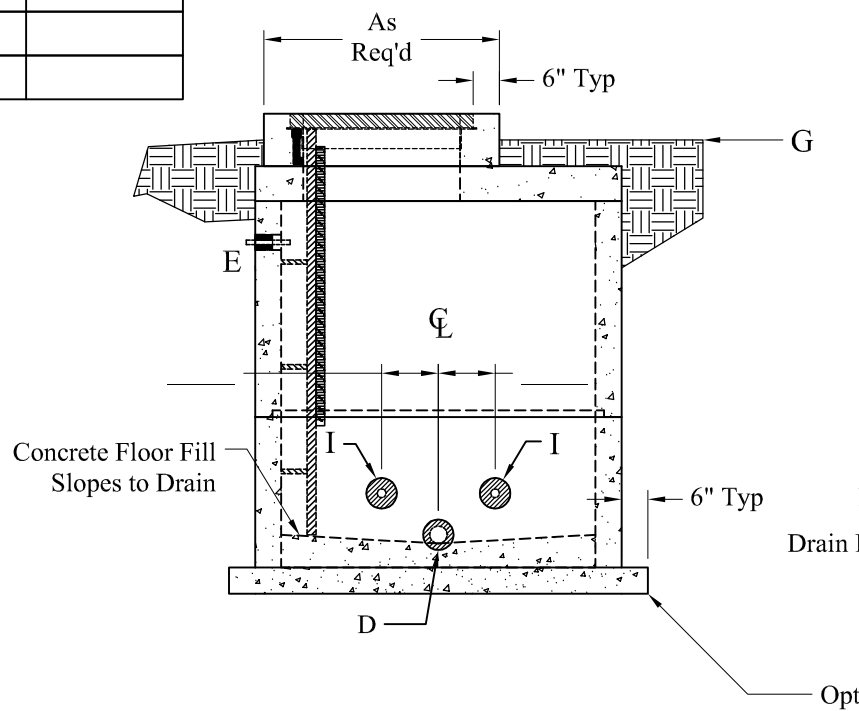

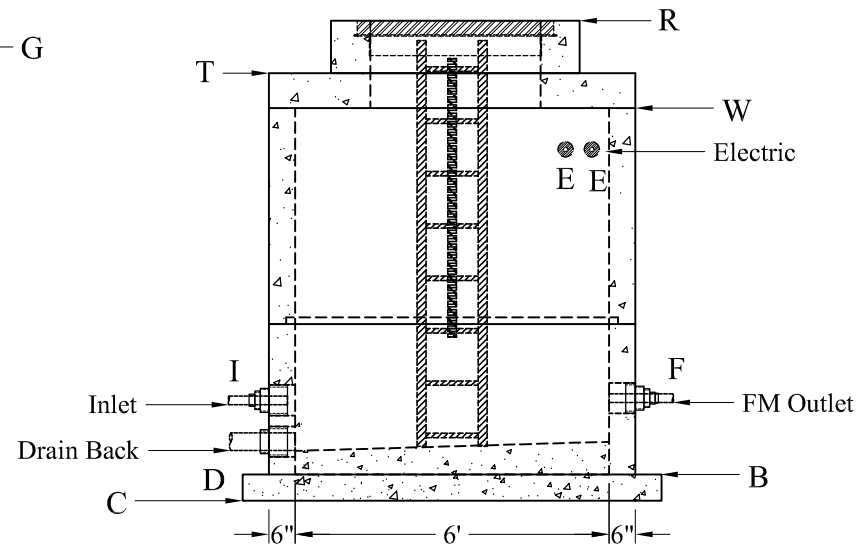

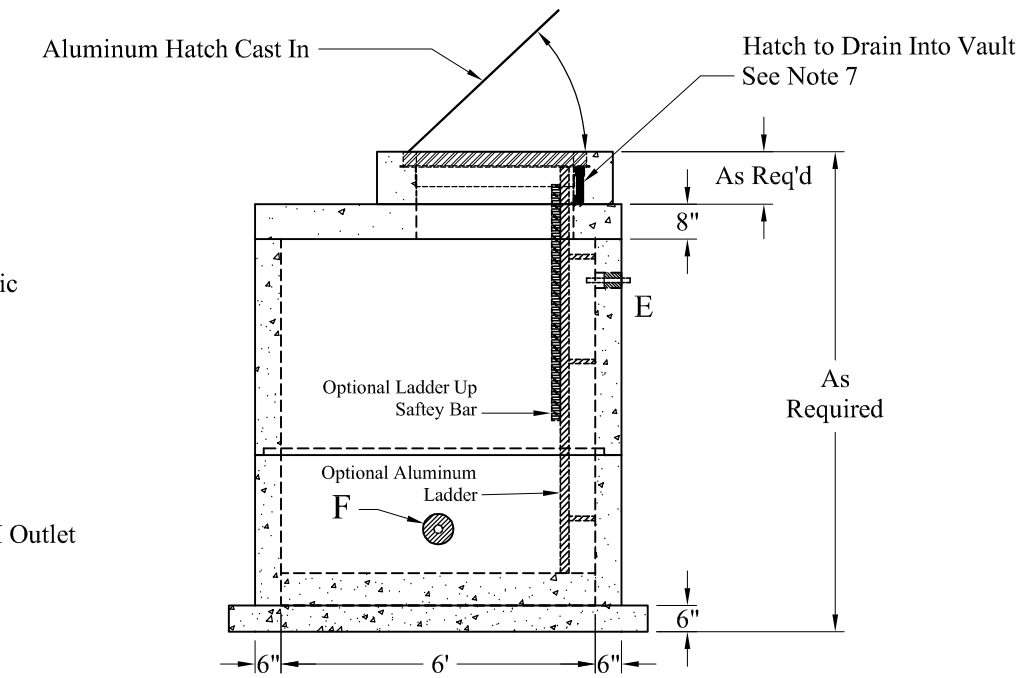

Customer:		Job No.	Date	Drawn By:	Phoenix Precast Products	Typical 6' x 6' Valve Vault Extended Base
			02/27/13	EWS		
Location:		Custom No.	Rev:	App'd:		
			1			

77 Regional Drive Concord, NH 03301

Phoenix Precast Products