1-800-639-2199 Fax (603) 224-2927

Accessories\Standard Tank Cover Sales

Phoenix Precast Products

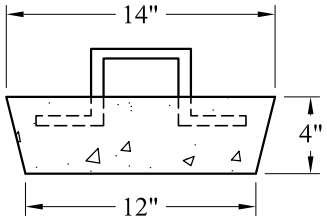

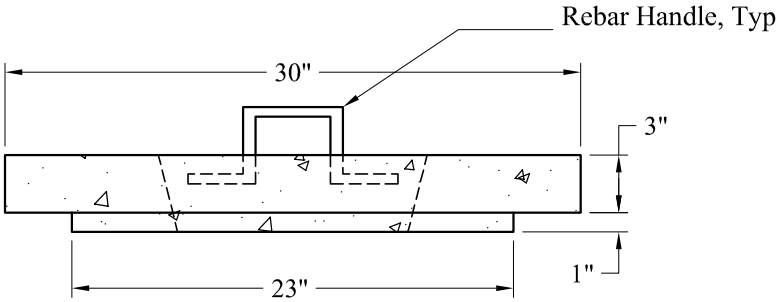

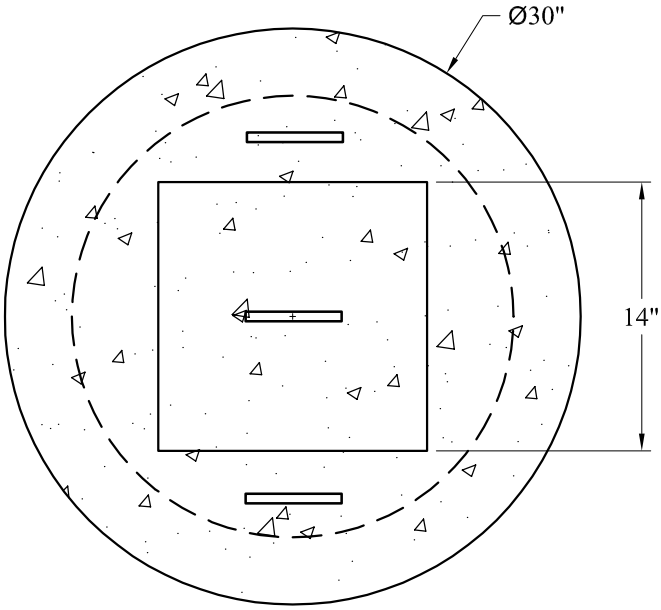

General Notes

1. Concrete: fc = 4,000 psi @ 28 Days Minimum
2. Reinforcing Steel: ASTM-A615 Grade 60

Phoenix Precast Products	Standard Tank Cover
P/N: TANKPLUGSM	

Phoenix Precast Products

77 Regional Drive Concord, NH 03301