1-800-639-2199 Fax (603) 224-2927

Trash Racks\Flat Structures\Flat Wall Trash Rack 3 to 8 Inch Orifice (v)

Phoenix Precast Products

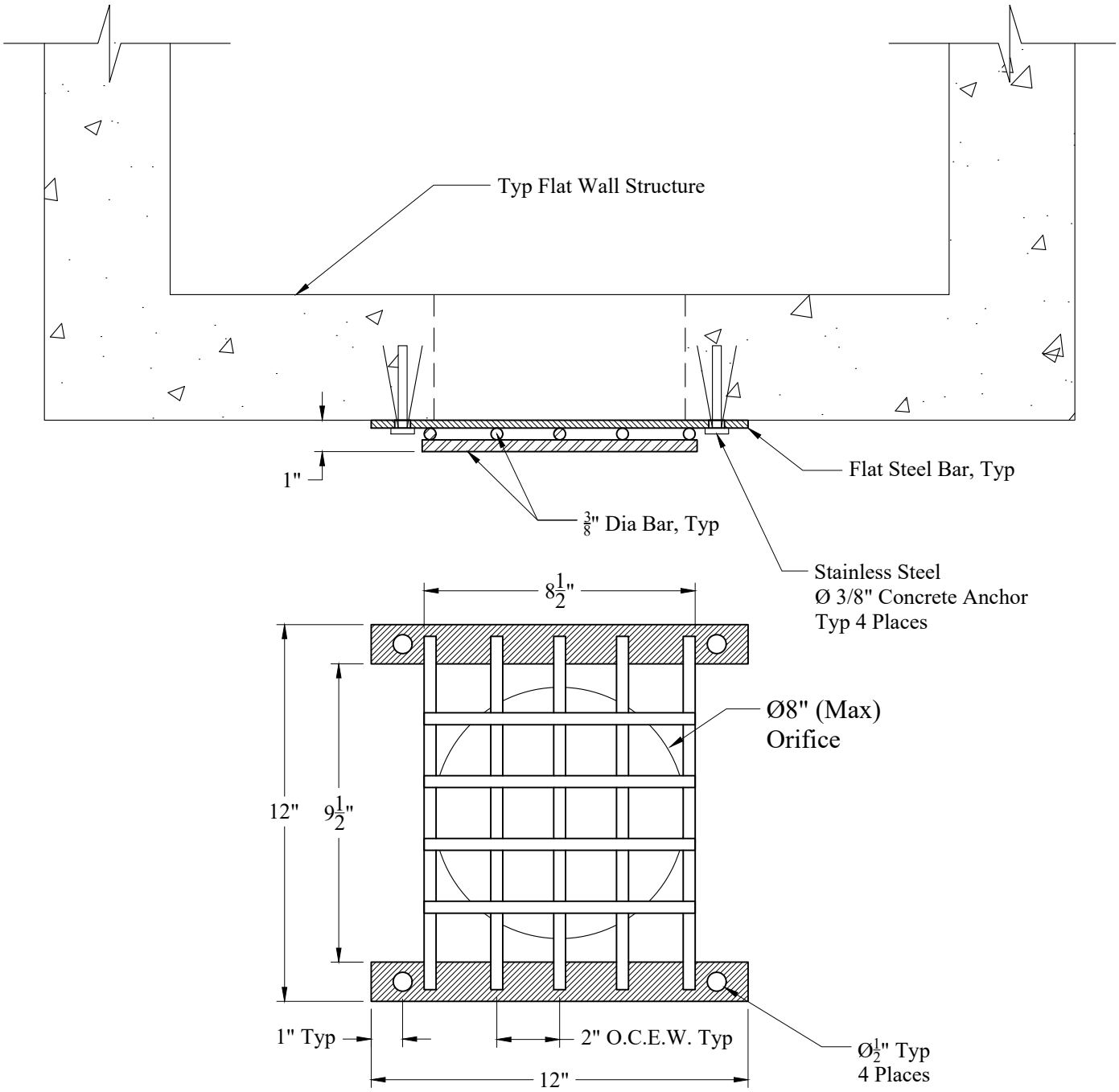

Phoenix Precast Products

General Notes

1. Materials:
   - $1\frac{1}{4}$" x $\frac{1}{4}$" Flat Steel Bar
   - $\frac{3}{8}$" Dia HR Round Steel Bars @ 2" O.C.E.W.
2. Finish Options:
   - A. Unfinished
   - B. Painted
   - C. Hot Dip Galvanized
3. Fastening Method:
   - Bolted with $\frac{3}{8}$" Stainless Steel Concrete Anchors

Phoenix Precast Products	Flat Wall Trash Rack 3" Thru 8" Orifice
P/N: Custom As Required	

26Jun24_Rev2 RR

77 Regional Drive Concord, NH 03301